Conservation of Natural Resources through Level Monitoring of Water Tank

[1]Subham Bubna, [2]Rajat Nigam

[1,2]Department: Electronics & Communication Engineering Sikkim Manipal Institute of Technology
Email: [1]subham.bubna@gmail.com, [2]rajatnigam1811@gmail.com

Abstract— An achievement in computer technology is used not only in business and industry but has also covered almost all fields, including control system where a computer system can be used to control the hardware in a flexible way. Therefore, computer based control system is become more common in recent development of control system. Computer-based control system also can be implemented for controlling flow of water in house or in buildings hence reducing the wastage of water (Conservation of Natural Resources) and avoiding dry-run of motor (Energy Conservation).

Objective of this project is to monitor overhead tank and ground level tank. The aim of this research is to develop prototype of water level detection that can be viewed as a part of control system of river flow management system.

Keywords— Control system, Micro-controller, Ultrasonic, Sensor, Conservation

I. INTRODUCTION

The aim of this project is to develop prototype of water level detection that can be viewed as a part of control system of river flow management system. The system consist of two parts, transmitter and receiver modules. Transmitter module detect water level automatically, then transmit the data to controller. Ultrasonic sensor is used to detect the distance between sensor and the water surface. Ultrasonic sensors utilize the principle of sound reflection to measure the level of the water. Elapsed time required to transmit and receive the reflected ultrasonic wave is multiplied by the rapid propagation of sound in water in order to obtain the distance value. The calculation is performed by C language program that reside in microcontroller. The distance value then is transmitted. The water level then is displayed. Water level information is also displayed in LCD.

Two sensors are used to monitor a ground level water tank and a over head water tank. A water pump is connected in the ground level tank. When the water level in over head tank is below a certain level and there is sufficient amount of water in the ground level tank then water from ground level tank is transferred to over head tank. This will avoid the dry run of motor and will avoid the coil from burning (Energy Conservation).

Fig. 1 shows the water level controller. Microcontroller will monitor the values of both the sensors i.e. sensor 1 and sensor 2. Depending on the conditions the water flow will be controlled.

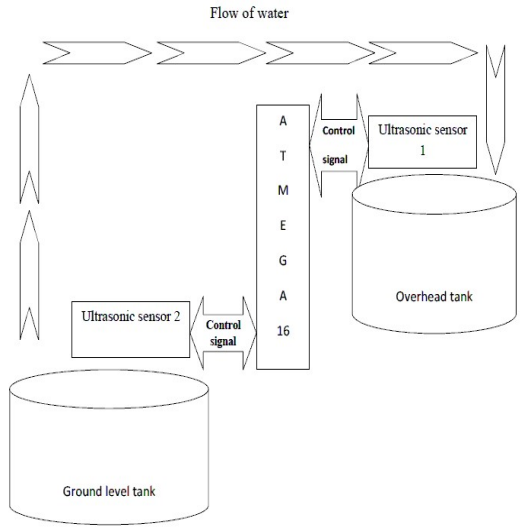

Figure1. Block Diagram of Water Level Controller.

II. CIRCUIT THEORY

A. ATMEGA 16

Microcontroller literally means that micro-sized controller. The ATmega16 is a low-power CMOS 8-bit microcontroller based on the AVR enhanced RISC architecture The AVR core combines a rich instruction set with 32 general purpose working registers. All the 32 registers are directly connected to the Arithmetic Logic Unit (ALU), allowing two independent registers to be accessed in one single instruction executed in one clock cycle. The resulting architecture is more code efficient while achieving throughputs up to ten times faster than

conventional CISC microcontrollers. The ATmega16 provides the following features: 16K bytes of In-System Programmable Flash Program memory with Read-While-Write capabilities, 512 bytes EEPROM, 1K byte SRAM, 32 general purpose I/O lines, 32 general purpose working registers, a JTAG interface for Boundary scan, On-chip Debugging support and programming, three flexible Timer/Counters with compare modes, Internal and External Interrupts, a serial programmable USART, a byte oriented Two-wire Serial Interface, an 8-channel, 10-bit ADC with optional differential input stage with programmable gain (TQFP package only), a programmable Watchdog Timer with Internal Oscillator, an SPI serial port, and six software selectable power saving modes. The Idle mode stops the CPU while allowing the USART, Two-wire interface, A/D Converter, SRAM, Timer/Counters, SPI port, and interrupt system to continue functioning. The Power-down mode saves the register contents but freezes the Oscillator, disabling all other chip functions until the next External Interrupt or Hardware Reset. In Power-save mode, the Asynchronous Timer continues to run, allowing the user to maintain a timer base while the rest of the device is sleeping. The ADC Noise Reduction mode stops the CPU and all I/O modules except Asynchronous Timer and ADC, to minimize switching noise during ADC conversions. In Standby mode, the crystal/resonator Oscillator is running while the rest of the device is sleeping. This allows very fast start-up combined with low-power consumption. In Extended Standby mode, both the main Oscillator and the Asynchronous Timer continue to run.

B. HC SR 04

Ultrasonic Sensor (HC SR-04) module is low cost, high performance sensor and provides stable and high ranging accuracy. It's ranging distance is 2cm to 350cm with 3mm accuracy. The module includes ultrasonic transmitter, receiver and control circuit.

Sensor works on trigger (TTL-10usec) pulse provided by any device. When trigger pulse sends to the trigger pin of sensor. Then sensor module will send the 8 cycle of 40KHz ultrasonic pulses and receives echo signal after striking on object & reflect back which is detailed in a below shown Timing Diagram. The distance between the sensor and the object is calculated by measuring high level time of the Echo pulse which can be retrieved from ECHO pin of the sensor module. Fig. 2 shows the timing diagram of HC SR04.

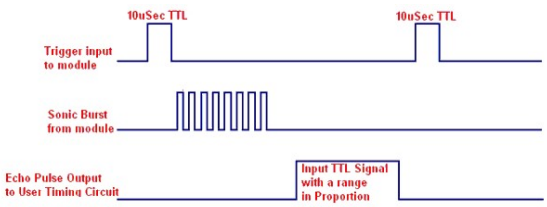

Figure2. Timing Diagram of HC SR04.

C. 16*2 LCD Display

Alphanumeric displays are used in a wide range of applications, including palmtop computers, word processors, photocopiers, point of sale terminals, medical instruments, cellular phones, etc. The 16 x 2 intelligent alphanumeric dot matrix display is capable of displaying 224 different characters and symbols.

A 16x2 LCD means it can display 16 characters per line and there are 2 such lines. In this LCD each character is displayed in 5x7 pixel matrix. This LCD has two registers, namely, Command and Data. The command register stores the command instructions given to the LCD. A command is an instruction given to LCD to do a predefined task like initializing it, clearing its screen, setting the cursor position, controlling display etc. The data register stores the data to be displayed on the LCD. The data is the ASCII value of the character to be displayed on the LCD. Fig. 3 shows the pin configuration of LCD that needs to be connected to ATMEGA 16.

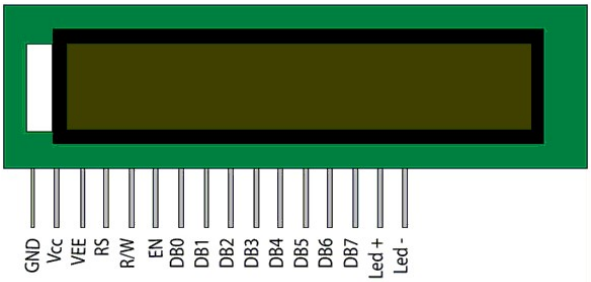

Figure3. Pin Configuration of LCD

D. L293D

The L293D are quadruple high-current half-H drivers. The L293D is designed to provide bidirectional drive currents of up to 600-mA at voltages from 4.5 V to 36 V. It is designed to drive inductive loads such as relays, solenoids, dc and bipolar stepping motors, as well as other high-current/high-voltage loads in positive-supply applications.

Fig. 4 shows the pin configuration of L293D Motor driver IC.

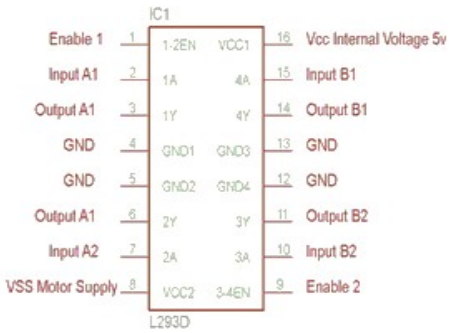

Figure4. Pin Diagram of L293D.

E. Relay

A relay is an electrical switch that opens and closes under the control of another electrical circuit. The output of flip flop is connected to a relay. The 'NO' contact of the relay is connected with the power supply to water pump. When this relay will be on, then the water pump will start and when it is off then the power supply to water pump will be cut off and hence it stops.

It is used to isolate two devices electrically and connect them magnetically. They are very useful devices and allow one circuit to switch another one while they are completely separate. They are often used to interface an electronic circuit (working at a low voltage) to an electrical circuit which works at very high voltage.

For example, a relay can make a 5V DC battery circuit to switch a 230V AC mains circuit. Thus a small sensor circuit can drive, say, a fan or an electric bulb.

A relay switch can be divided into two parts: input and output.

The input section has a coil which generates magnetic field when a small voltage from an electronic circuit is applied to it. This voltage is called the operating voltage. Commonly used relays are available in different configuration of operating voltages like 6V, 9V, 12V, 24V etc.

The output section consists of contactors which connect or disconnect mechanically. In a basic relay there are three contactors: normally open (NO), normally closed (NC) and common (COM). At no input state, the COM is connected to NC. When the operating voltage is applied the relay coil gets energized and the COM changes contact to NO.

Fig. 5 shows the basic structure of relay.

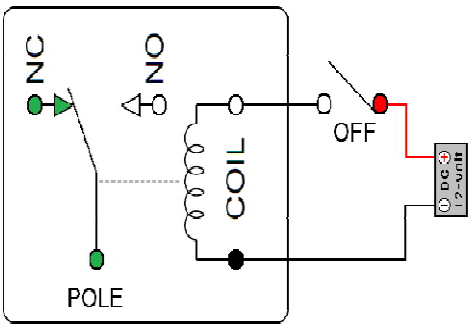

Figure5. Relay Pin Diagram

F. Light Emitting Diode

A light emitting diode (LED) is a two-lead semiconductor light source.

When a suitable voltage is applied to the leads, electrons recombine with electron holes within the device, releasing electrons in the form of photons.

This effect is called electroluminescence and the colour of the light is determined by the energy band gap of the semiconductor.

An LED is usually very small in area & integrated optical components may be used to shape its radiation pattern.

Recent developments in LED permit them to be used in environmental and task lighting.

III. HARDWARE IMPLEMENTATION

A. Connection of Atmega 16 and 16*2 LCD

Fig. 6 shows the basic connections of the microcontroller i.e. VCC, GND, crystal oscillator.

LCD data pin is connected to port C of microcontroller.

Further it is followed by the interfacing of a 16*2 LCD Display. This LCD will display the reading of water in the tanks.

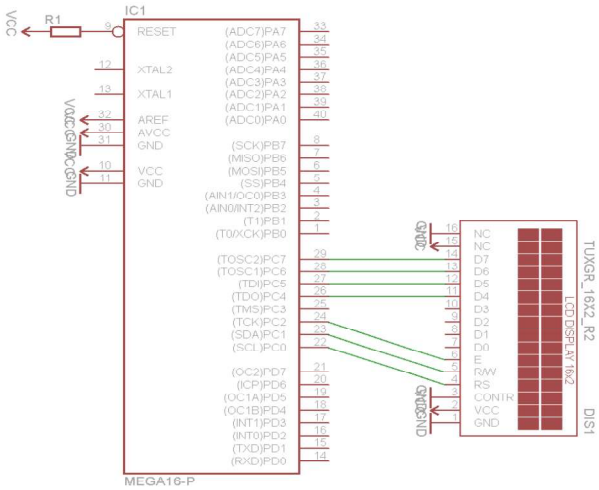

Figure 6. LCD Connection

B. Connection of ultrasonic sensors with Atmega 16

Connections of both the ultrasonic sensors along with the microcontroller are shown in the Fig. 7.

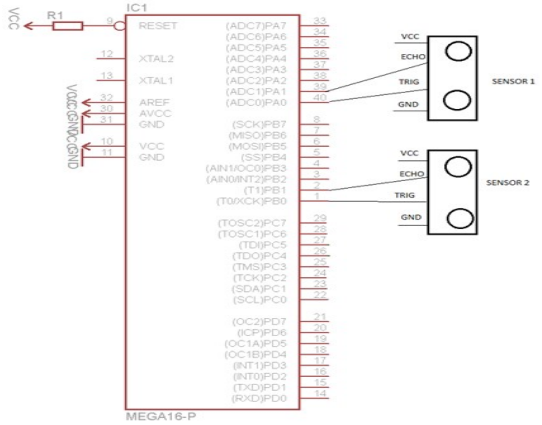

Figure7. Interfacing of Ultrasonic Sensor With Atmega 16

C. Connection of Motor Driver IC with Atmega 16

Fig. 8 shows the connection of Motor Driver IC with Atmega 16. Output of microcontroller from pin 20 and 21 is connected to the motor driver IC. The output of motor driver IC from pin 3 and 6 is connected to the relay. This will give the input to the relay and will be followed by driving the water pump.

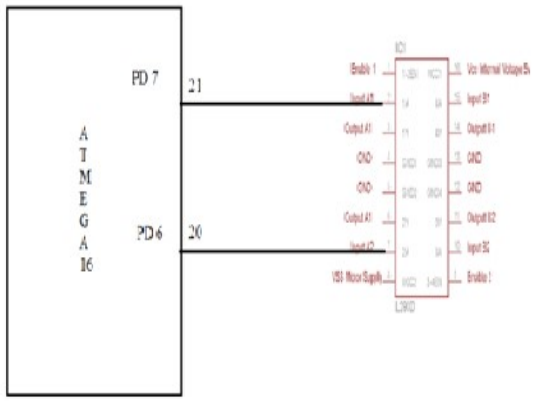

Figure 8. Connection of motor driver IC with Atmega 16

D. Overall Connection

Fig. 9-Both the sensors will sense the depth of water from both the tanks. If the water level in over head tank is less than a certain level and the water level in the ground level tank is greater than a certain level, then the controller will turn on the motor. The output of controller is fed to the motor driver IC. Output of motor driver IC is given to the relay. On the other side, relay is connected to 240V water pump. When the output of driver IC is high, the pump is turned ON and the water is transferred to the overhead tank, as the output of driver IC goes low, the pump is turned OFF.

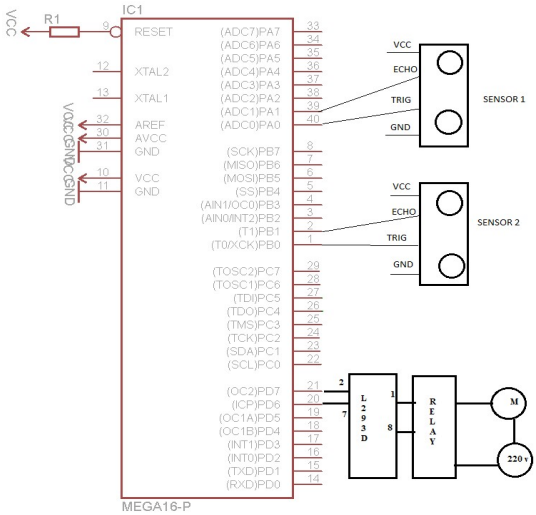

Figure 9. Connections of Sensors,LCD,L293D and Relay

E. Flowchart

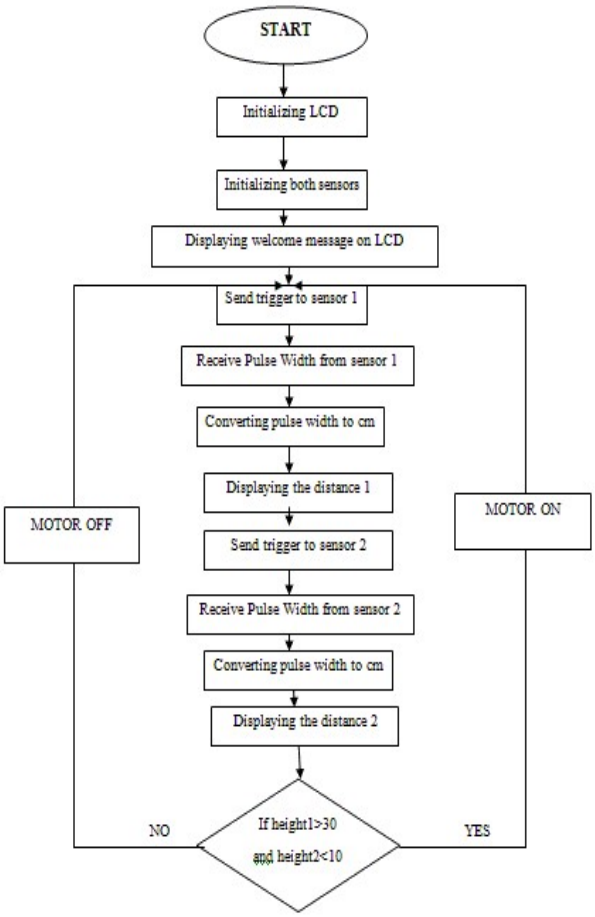

Figure 10. Flowchart of Water level controller

F. Working

- Initialize the LCD display so as to display the readings of the sensors.
- Initialize the sensors so as to transmit and receive a pulse and hence calculate the distance between the sensor and obstacle.

- Print a display message so as to verify the working of the LCD display.
- Send a trigger pulse from the transmitter of sensor 1.
- Receiver of the sensor 1 will receive the reflected pulse.
- Received pulse width needs to be converted into “cm”.
- Display the calculated distance 1.
- Send a trigger pulse from the transmitter of sensor 2.
- Receiver of the sensor 2 will receive the reflected pulse.
- Received pulse width needs to be converted into “cm”.
- Display the calculated distance 2.
- If the water in over head tank is more than 30 cm then the pump needs to bo stopped.
- If the water in ground level tank is less than 10 cm then stop the pump.
- If the water in ground level tank is greater than 10 cm then start the flow of water.

G. **Result**

Basically, prototype of Water Level Detection System consist of two modules, receiver and transmitter module. Transmitter module responsible to transmit and display data received from the ping sensor. Receiver module accepts the data transmitted from transmitter module and transfer it to the computer for further process.

Ultrasonic sensor is a proximity sensor that can be used to measure the distance of objects as far as 3 cm to 300 cm when the sensor is obstructed by an object. The position of the object must be measured perpendicular to the line of sight sensor. Otherwise there will be an imperfect reflection of ultrasonic waves and cause measurement errors. In addition, water surface must also be calm in order to detect the level of water correctly or at least with the minimum measurement error. Measurements were obtain by sending ultrasonic waves with a frequency of 40 KHz and speed of 344 m/s then ping will receive reflected wave, then generate the logic pulse. Basically, ping sensor consists of a 40 KHz signal generator chip, an ultrasonic speaker and an ultrasonic microphone. Ultrasonic speaker converts the signals into 40 KHz ultrasonic sounds while the microphone is used to detect the reflected sound. Ultrasonic sensor detects objects by sending ultrasonic sound and then "listens" to the echoes. Ping will only transmit ultrasonic sound when there is a trigger pulse from the microcontroller (high pulse for 3 µs). Ultrasonic sound with a frequency of 40 KHz is emitted in 200µs time. This sound will propagate in the air at speeds of 344,424 m/s (or 1 cm per 29.034µs), detect the object and then reflected back to the ping sensor. While waiting for the reflection, the ping sensor will generate a pulse. These pulses will stop (low) when the reflected sound is detected by the ping sensor. Therefore, the distance between ping sensor and object is represented by pulse width. The microcontroller then simply measures the width of these pulses, converts them into a distance.

Then the data is processed by the Atmega 16 microcontroller. ATMega16 is the brain of module that controls the work of the sensor and calculates the distance based on the pulse width. Water level detected from ping sensor is also displayed on 2X16 LCD display. There are two types of interfaces that can be used in controlling the LCD which is 4 bits and 8 bits. In a 4-bit interface, the LCD only requires four data pins, DB4 (pin 11) - DB7 (pin14), which is connected with the controller. Number of pins required for controlling the LCD can be adjusted by setting it in initialization process. Basically the transmitted data is 8 bits, if 4-bits control is used, the process of sending data is done twice through 4 pin, DB4-DB7. 10 KΩ trimpot is used as a regulator to adjust the brightness of the LCD.

Figure 11. Water in ground level tank is greater than 10 cm

Fig. 11-When the water in the ground level tank is more than 10 cm and in the overhead tank is less than 40 cm, the water pump starts to deliver the water to the over head tank. As the water in over head tank reach 40 cm height, the pump will be automatically turned OFF.

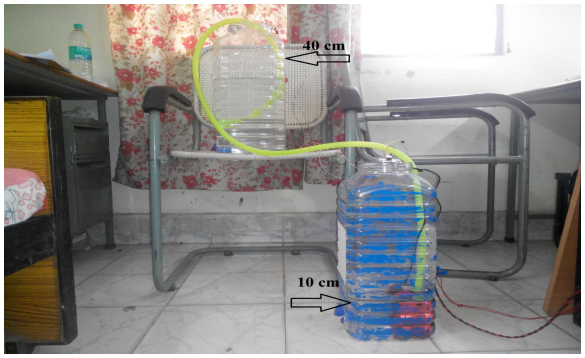

Figure 12 : Water in ground level tank is equal 10 cm

Fig. 12-As the water in the ground level tank reach the height of 10 cm, so the motor is automatically turned OFF. This helps us in avoiding the dry run of motor.

If the height of ground level tank is greater than 10 cm but the height of water in over head tank is equal to 40 cm then also the motor will be turned OFF. This will be helpful in avoiding the over flow of water from over head tank. Thus helping us in the conservation of natural resources.

IV. FUTURE WORK

The future work of this model lies in the overcoming the limitations and adding important features to maximize the safety purpose. It will be a great challenge to make the circuit water proof so that no hindrance could be caused by the weather. Secondly, other type of distance measurement sensor could be used. Such as laser type distance measurement sensor. Moreover, a DC motor controlled servo mechanism could be implemented to run the system automatically making the system more versatile and offering it new dimensions. However, to achieve higher precision in depth measurement the latest technology like DSP can be applied. This type of solution will filter the received wave form more accurately and remove the parasite reflection from the surrounding body. Furthermore, the distance measuring circuit can be modified also. The 15-20 KHz signal cannot travel for a longer distance. For a fair distance 40 KHz signal would be a better solution. Last but not the least, the quality of the ultrasonic transducer was not high enough for such precession application. The ultrasonic wave might have scattered around causing error in tending the actual surface of reflection. This added more error in calculation.

V. APPLICATION

There are several areas where this model can fit and contribute. Water level measurement equipment is becoming increasingly important for the implementation of water conservation programs in irrigation districts, water transporting systems, sea levels detection, earthquake alarms etc. This setup is very useful in the following sectors.

- Measurement of water levels upstream or downstream of canal check structure.
- Measurement of water levels at key remote monitoring points such as regulating reservoirs and tail end canal pools of a Hydro-electric power plant.
- Measurement of water levels on “critical flow” measurement devices in irrigation district canals, such as flumes or weirs.
- Measurement of water levels for water transporting system such as ships, boats. Failure or inaccuracies of the sensing equipment in this application can have catastrophic results such as collision between ships.
- Measurement of water levels on rising sea levels. Flooding caused by more frequently occurring storm surges is an indication of rising sea levels.
- Measurement of water levels as an indicator of Climate and Global Change.
- Measurement of water levels as an earthquake alarm.

VI. CONCLUSION

Prototype of Water Level Detection and controlling System has been tested. The main contribution of this performance is the ultrasonic sensor calibration by adjusting calculation of distance based on an actual data. Testing need to be carried out for the real fluctuated water surface condition to get the system performance in the real condition. The water level data is successfully displayed locally, therefore this prototype can be used as a part of the bigger system, such as, river flow management system which controls the stream to minimize the flood.

Since computer is used as a part of receiver module, therefore more sophisticated system can be developed to display and analysis time series water level data, instead of only displaying the current water level data. The construction and operation of the circuit is simple. It is also economical for the simplicity it offers. When measuring water level in sealed tanks in a wide temperature interval the propagation of ultrasonic signals needs to be improved. It is also required to increase the range of ultrasonic signals to measure the deep depth of different water sources. If all the future works can manipulate to the device then it will be an excellent in case measuring the depth of water and object detection.

ACKNOWLEDGMENT

I am extremely grateful to my project guides, **Mr. O. P.Singh (**Associate Professor, E & C Dept, SMIT**)** and **Mr. Dipanjan Bhattacharjee** (Assistant Professor, E & C Dept., SMIT) for insightful suggestions on the project work and for guiding me during the entire project with their encouragement, support and cooperation. I am also grateful to **Prof. (Dr.) R. N. Bera** (HOD, E & C Dept., SMIT), for allowing me to proceed with the project and providing me with the opportunity to embark on the subject, which has given me invaluable knowledge and experience. I would also like to extend my heart-felt thanks to my family and friends for their moral support, love and affection.

REFERENCES

[1] S. D. Gupta, I. Md. Shahinur, A. A. Haque, A. Ruhul, and S. Majumder, "Design and implementation of water depth measurement and object detection model using ultrasonic signal system," International Journal of Engineering Research and Development , vol 4, Issue 3, October 2012.

[2] S. Jatmiko, A. B. Mutiara, and M. Indriati, "Prototype of water level detection system with wireless," Journal of Theoretical and Applied Information Technology, vol. 37 No.1. March 2012.

[3] [Online], "Atmega 16," in http://en.wikipedia.org/wiki/Atmel_AVR.

[4] [Online], "HC SR04," in https://www.tindie.com/products/upgradeindustries/hc-sr05-precision-ultrasonic-sensor/

[5] [Online], "L293D," in http://www.ti.com/lit/ds/symlink/l293d.pdf